

ZHEJIANG ZHEGUI ELECTRIC CO,. LTD.

Address: No.316 Weishiyi Road , Yueqing City,
Zhejiang Province, China
ProvinceTel: 0577-62657695/626577696
Email address:service@giantele.com
Website: www.giant-electric.com

Giantele®

VS1-12

VS1-12 series indoor high voltage vacuum circuit breaker

www.giant-electric.com

The meaning of the product model

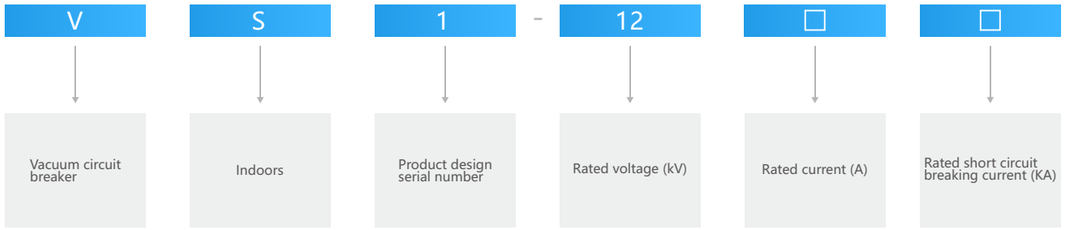

Overview

VS1-12 indoor high-voltage vacuum circuit breaker (hereinafter referred to as circuit breaker) is used for indoor switching equipment in 12KV power system, as the protection and control unit of power grid equipment, industrial and mining enterprises. Because of the special advantages of vacuum circuit breaker, it is especially suitable for frequent operation requiring rated working current, or multiple times to break the short circuit current.

The circuit breaker adopts the integrated design of the operating mechanism and the circuit breaker body, which can be used as a fixed installation unit or a special propulsion mechanism to form a handcart unit.

Product basis standard

GB/T1984-2014 AC high-voltage Circuit Breaker,

JB/T 3855-2008 High Voltage AC Vacuum Circuit Breaker,

DL/T 403-2000 "12kV-40.5kV High voltage vacuum Circuit breaker ordering Technical Conditions" standard requirements.

And comply with IEC 62271-100 requirements.

Environmental conditions of use

Normal service condition

- Ambient temperature
  Maximum temperature: +40 ° C
  Minimum temperature: -25 ° C
- Ambient humidity
  Daily mean relative humidity: ≤95%
  Monthly mean relative humidity: ≤ 90%
- Altitude: No more than 1000m
  The intensity of the earthquake was not more than 8 degrees
- The use place is free from dripping water, flammable and explosive danger, chemical corrosive gas and violent vibration.

Special service conditions

- For special use conditions, by the manufacturer and the user to negotiate, and reached a consensus, to provide special design and supply;
- Special conditions of use are:
  ① The altitude above 1000m;
  ②Places with condensation risk under high humidity or climate conditions with large humidity mutation.

Main specifications and technical parameters

NO.	Project	Unit	Numerical value
1	Rated voltage	kV	12
2	Rated short-time power frequency withstand voltage(1min)		42
3	Rated lightning shock tolerance voltage (peak)		75
4	Rated frequency	Hz	50
5	Rated current	A	630 630 1250 1600 1250 1600 2000 1250 2000 2500 3150 2500 3150 4000
6	Rated short-circuit breaking current	kA	20/25 31.5 40
7	Rated short-time withstand current		20/25 31.5 40
8	Rated short circuit duration	S	4
9	Rated peak tolerable current	kA	50/63 80 100
10	Rated short-circuit closing current		50/63 80 100
11	Secondary circuit power frequency withstand voltage (1min)	V	2000
12	Rated single/back-to-back capacitor group breaking current	A	630/400(800/400 for 40kA)
13	Rated capacitor bank turn-on inrush current	kA	12.5(Frequency not more than 100Hz)
14	Switching time (rated voltage)	ms	≤50
15	Closing time (rated voltage)		≤60
16	Mechanical life	Time	20000
17	Breaking times of rated current (electrical life)		20000
18	Number of breaks of rated short circuit current		50(40kA≤30)
19	Kinematic and static contacts allow wear accumulative thickness	mm	3
20	Rated closing operating voltage	V	AC110/220 DC110/220
21	Rated switching operating voltage		
22	Rated voltage of energy storage motor		
23	Rated power of energy storage motor	W	70
24	Energy storage time	S	≤10
25	Contact opening distance	mm	11±1
26	Overstroke		3.5±0.5
27	Contact closing bounce time	ms	≤2(40kA≤3)
28	Three - phase switching and closing are different		≤2
29	Average opening speed	m/s	1.1±0.2
30	Average closing speed		0.6±0.2
31	Main circuit resistance (fixed/hand)	μΩ	≤45/60(630A)≤40/55(1250A) ≤30/50(1600-2000A) ≤25/35(More than 2500A)
32	Contact closing contact pressure	N	2000±200(20kA)2400±200(25kA) 3100±200(31.5kA)4250±250(40kA)
33	Rated operation sequence		Opening -0.3s(18OS)-Opening and closing 180S-Opening and closing

○ Product structure and working principle

● Main structure

The overall structure of the VS1-12 vacuum circuit breaker adopts the form of an operating mechanism and a front and rear arrangement of the arc extinguishing chamber. The vacuum arc extinguishing chamber is longitudinally installed in a tubular insulation cylinder, which is cast from epoxy resin using APG process, making it particularly resistant to creepage. This structural design greatly reduces the accumulation of dust on the surface of the arc extinguishing chamber. Not only can it prevent the vacuum interrupter from being damaged by external factors, but it can also ensure that even in humid, hot, and severely polluted environments, it can present a high resistance state to voltage.

Main circuit current path when circuit breaker is in closing position: (see Figure 2)
Upper outlet seat 27 through the upper support 26 fixed on the arc extinguishing chamber to the static contact in the vacuum arc extinguishing chamber, through the moving contact and its connected conductive clip, soft connection, to the lower support 30 to the lower outlet seat 31. The circuit breaker is equipped with a dust-proof insulation cover for each current level before delivery. In actual use, the circuit breaker does not need to be removed when the rated current is 1250A or below, and must be removed when the rated current is 1600A or above.

● Operating mechanism (see Figure 1, Figure 2)

The operating mechanism is a spring operating mechanism arranged in a plane, with manual energy storage and electric energy storage. The operating mechanism is placed in a box in front of the arc quenching chamber. The box is divided into five assembly Spaces by four middle partitions, which are respectively equipped with the energy storage part, transmission part, trip part and buffer part of the operating mechanism. VS1-12 vacuum circuit breaker integrates the arc extinguishing chamber and the operating mechanism into a unified whole, that is, adopts the integrated layout. This structure design can make the operating performance of the operating mechanism more consistent with the performance required by the opening and closing of the arc extinguishing chamber, reduce unnecessary intermediate transmission links, reduce loss and noise, and make the operating performance of VS1-12 circuit breaker more reliable. VS1-12 circuit breakers can be loaded into either hand - type switchgear or fixed switchgear.

● Energy storage

The energy required by circuit breaker closing is provided by closing spring energy storage. Energy storage can be done either by an external power-driven motor or manually using an energy storage handle.Energy storage operation: It is carried out by the energy storage motor 16 fixed on the frame, or the energy storage handle is inserted into the manual energy storage hole and shaken clockwise. Electric energy storage by the motor output shaft 15 drive sprocket drive system (14, 23, 18), manual energy storage through the worm gear, worm (11, 13) drive sprocket drive system. When the sprocket 23 rotates, the slider 4 on the pin 2 drive wheel 6 makes the energy storage shaft 7 rotate and energy storage is carried out by stretching the closing spring through the boom 5 and 21. When the energy storage position is reached, the limit rod 3 on the frame presses the slide block 4 to disconnect the energy storage shaft and the sprocket drive system, and the energy storage holding switch 9 holds the roller 8 to maintain the energy storage position. At the same time, the connecting plate on the energy storage shaft 24 drives the energy storage indicator 25 to turn over and show the "energy storage" mark and switch the auxiliary switch to cut off the power supply of the energy storage motor. At this time, the circuit breaker is in the state of closing preparation.

● Closing

During the closing operation, no matter pressing the "closing" button by hand or operating far away to make the closing electromagnet move, the energy storage holding shaft can rotate. When the roller 8 is released, the closing spring shrinks and the energy storage shaft 7 and the CAM 22 on the shaft rotate through the lever 5 and 21. The CAM drives the connecting rod mechanism (39, 38, 37, make the switch 936, 34) to drive the insulating tie rod 33 and the moving contact into the closing position, and compreses the contact spring 32 to maintain the contact pressure required by the contact. After the closing operation is completed, the closing hold switch 38 and half shaft 41 remain in the closing position. At the same time, the energy storage indicator and the energy storage auxiliary switch reset the motor power supply circuit. If the external power supply is connected, the energy storage state will be entered again. The 44-bit dynamic/partial indicator of the connecting board will show the "close" mark, and the driving rod will pull the main auxiliary switch to switch.

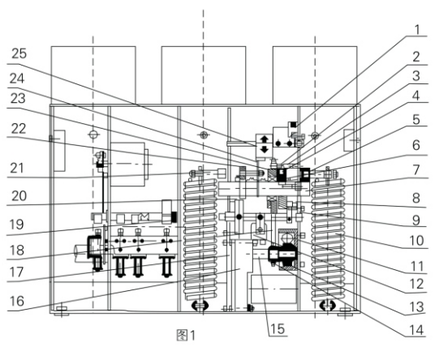

图1

1 Microswitch for energy storage in place switching
2 pins
3 Limit lever
4 Sliders
5 crank arm
6 Energy storage transmission wheel
7 Energy storage shaft
8 rollers
9 Energy storage retention switch
10 Closing spring
11 Manual energy storage worm
12 closing electromagnet
13 Manual energy storage transmission worm gear
14 Motor drive sprocket
15 Motor output shaft
16 Energy storage motor
17 Interlocking transmission bending plate
18 Transmission chain
19 Closing and holding axis
20 locking electromagnet
21 crank arm
22 cam
23 Energy storage transmission sprocket
24 connecting boards
25 Energy storage indicator board

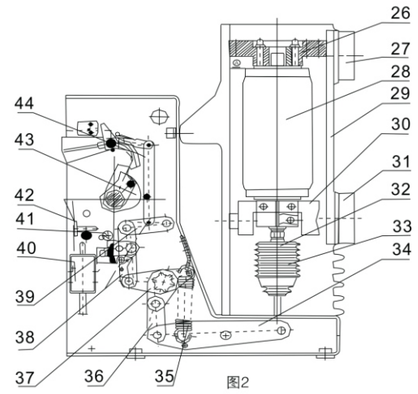

图2

26 Upper bracket
27 Upper outlet socket
28 Vacuum arc extinguishing chamber
29 Insulating cylinder
30 lower bracket
31 Lower outlet socket
32 contact pressure spring
33 insulated pull rod
34 Transmission crank arm
35 opening spring
36 Transmission connecting plate
37 Spindle transmission crank arm
38 closing and holding switch
39 connecting boards
40 opening electromagnet
41 Half shaft
42 Manual opening top rod
43 cam
44 Opening and closing indicator board connection board

Note: When the circuit breaker is already in the closing state or the locking device is selected without unlocking the locking device and the hand-driven circuit breaker is in the process of pushing out, the closing operation cannot be carried out.

● Switch off

You can either press the "opening" button or reliably connect the external power supply to activate the opening and tripping electromagnet or the overcurrent tripping electromagnet to release the closing holding switch 38 and the half shaft 41 to achieve opening operation. The energy stored by the contact spring and the opening spring 35 separates the dynamic and static contacts of the arc extinguishing chamber 28. In the later stage of the opening process, the hydraulic buffer absorbs the remaining energy during the opening process and limits the opening position. Pull the connecting rod 44 to display the "open" mark on the closing/opening indicator, and simultaneously pull the counter to achieve counter counting. The transmission connecting rod pulls the main auxiliary switch to switch.

● Anti-error interlocking

The circuit breaker can provide perfect anti-misoperation function. (See Figure 3 and Figure 4)

- After the closing operation of the circuit breaker is completed, the closing interlocking bending plate 1 runs downwards and catches the closing bending plate 2. When the circuit breaker is not opened, it cannot be closed again.
- After the circuit breaker is closed, if the closing electrical signal is not removed in a timely manner, the internal anti tripping control circuit of the circuit breaker will cut off the closing circuit to prevent multiple reclosures. (Optional)
- When the handcart circuit breaker is not in the test position or working position, the interlocking bending plate 3 fastens the pin 4 on the closing bending plate 2. Simultaneously cut off the closing circuit to prevent the circuit breaker from entering the load zone in the closed state.
- After the handcart circuit breaker is closed in the working or experimental position, the locking plate 6 of the pushing mechanism is pressed by the pin shaft 5. The handcart will not be able to move, preventing it from pushing or pulling out of the load zone in the closed state. (Figure 4)
  If electrical closing lock is selected, prevent closing operation without unlocking the locking position..

Note: The power of the closing and locking device is 5.5W, and the working voltage range is 0.65~1.1 times the rated voltage.

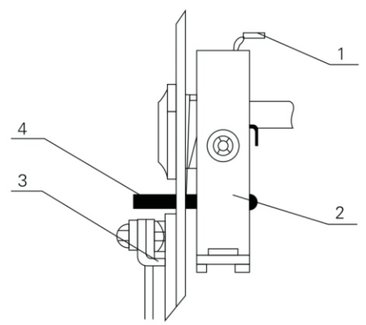

图3

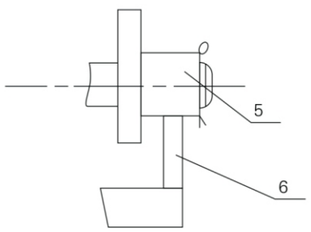

图4

○ Outline dimensional drawing

● **Hand car VS1-12 (650) External dimensions:**

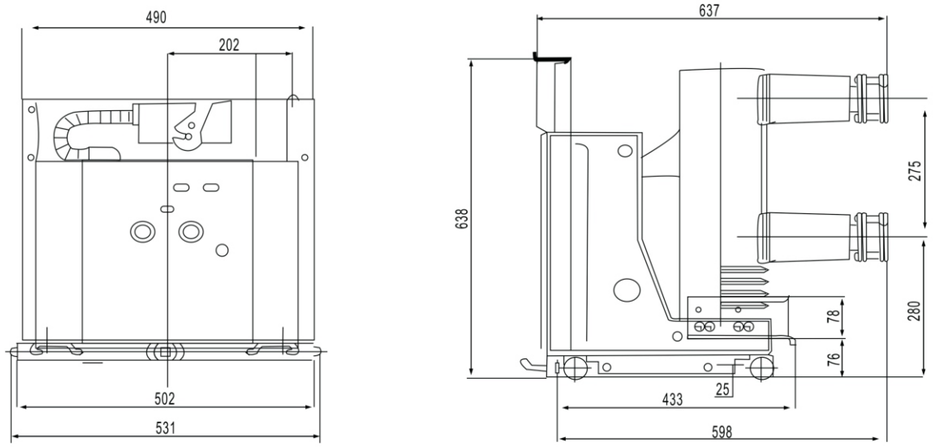

Rated current (A)	630	1250
Rated short circuit breaking current (KA)	20、25、31.5	20、25、31.5、40
Fit static contact size (mm)	Φ35	Φ49

● **The primary phase spacing is 150mm and the cabinet width is 650mm.**

Hand car VS1-12 (800) Dimensions:

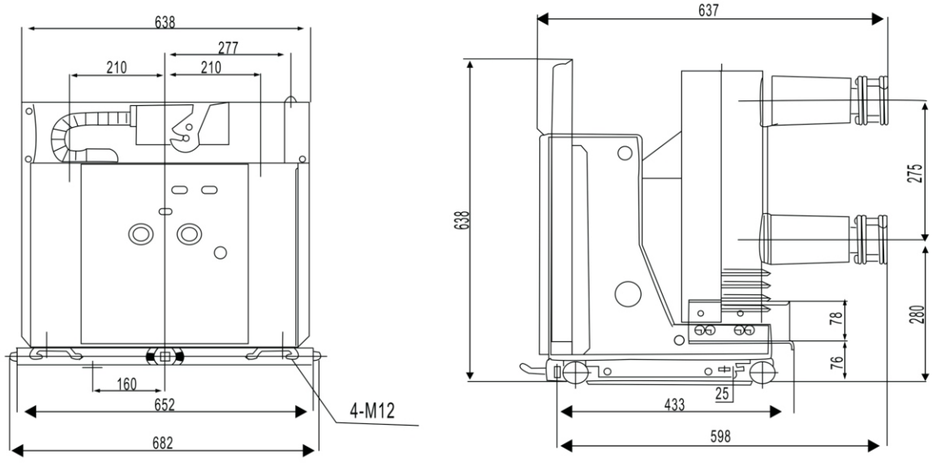

Rated current (A)	630	1250	1600
Rated short circuit breaking current (KA)	20、25、31.5	20、25、31.5、40	31.5
Fit static contact size (mm)	Φ35	Φ49	Φ55

The primary phase spacing is 210mm and the cabinet width is 800mm.

● **Hand car VS1-12 (1000) dimensions:**

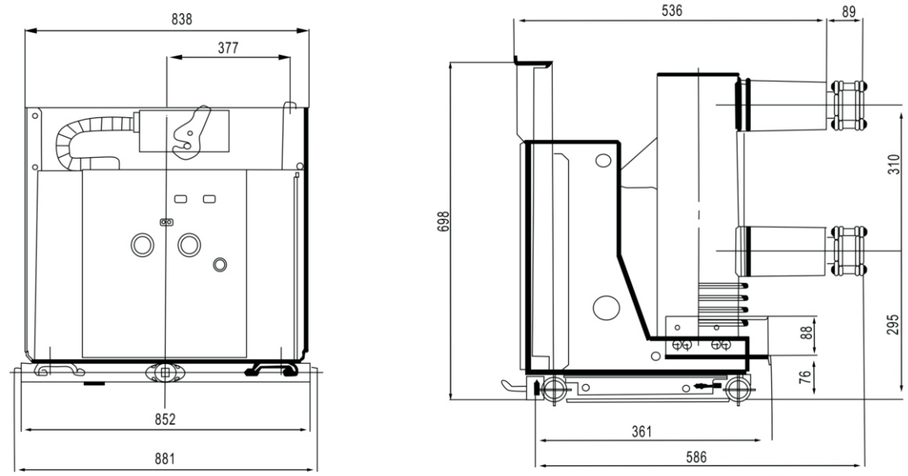

Rated current (A)	1600	2000	2500	3150	4000*
Rated short circuit breaking current (KA)	31.5、40	31.5、40	31.5、40	31.5、40	40
Fit static contact size (mm)	Φ79		Φ109		

● **The primary phase spacing is 275mm and the cabinet width is 1000mm. *4000A requires strong air cooling.**

Fixed VS1-12 (800) External dimensions:

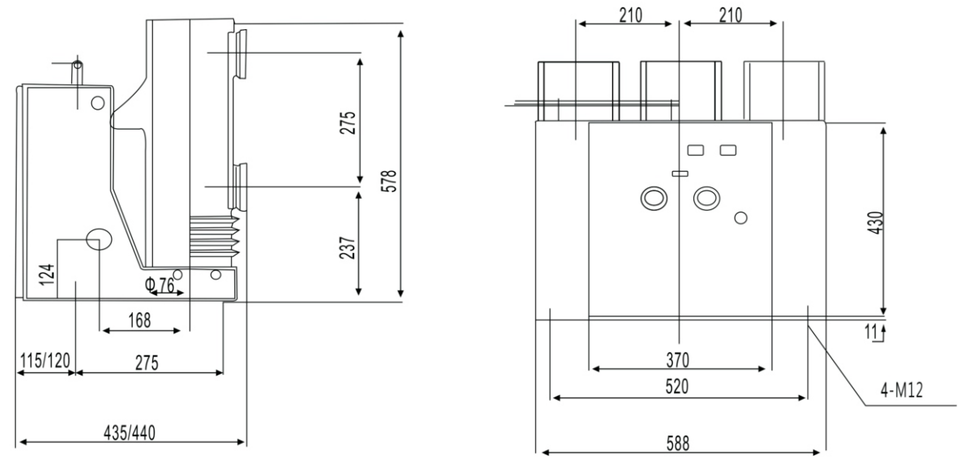

Rated current (A)	630	1250	1600
Rated short circuit breaking current (KA)	20、25、31.5	20、25、31.5、40	31.5

The primary phase spacing is 210mm and the cabinet width is 800mm.

- **Fixed VS1-12 (1000) External dimensions:**

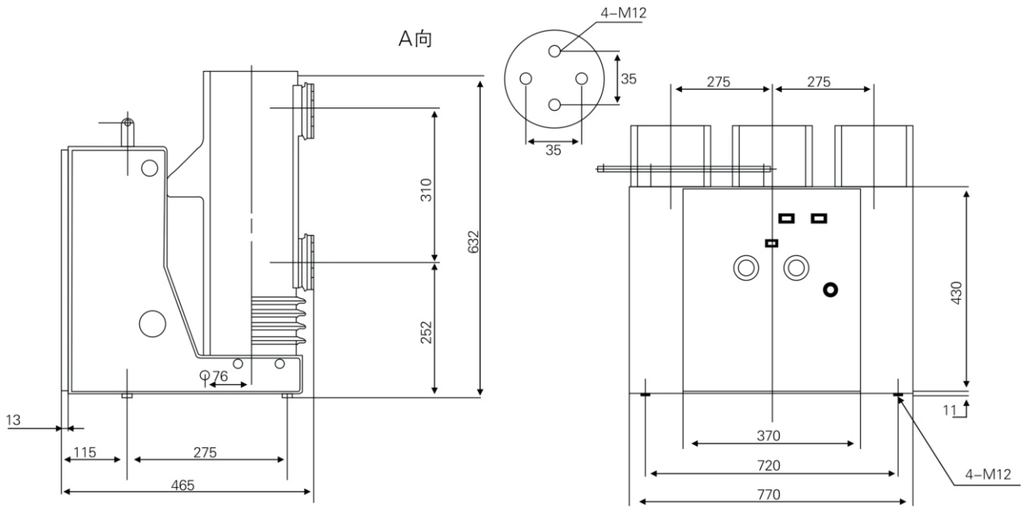

Rated current (A)	1600	2000	2500	3150	4000*
Rated short circuit breaking current (KA)	31.5、40				40

The primary phase spacing is 275mm and the cabinet width is 1000mm. *4000A requires strong air cooling.

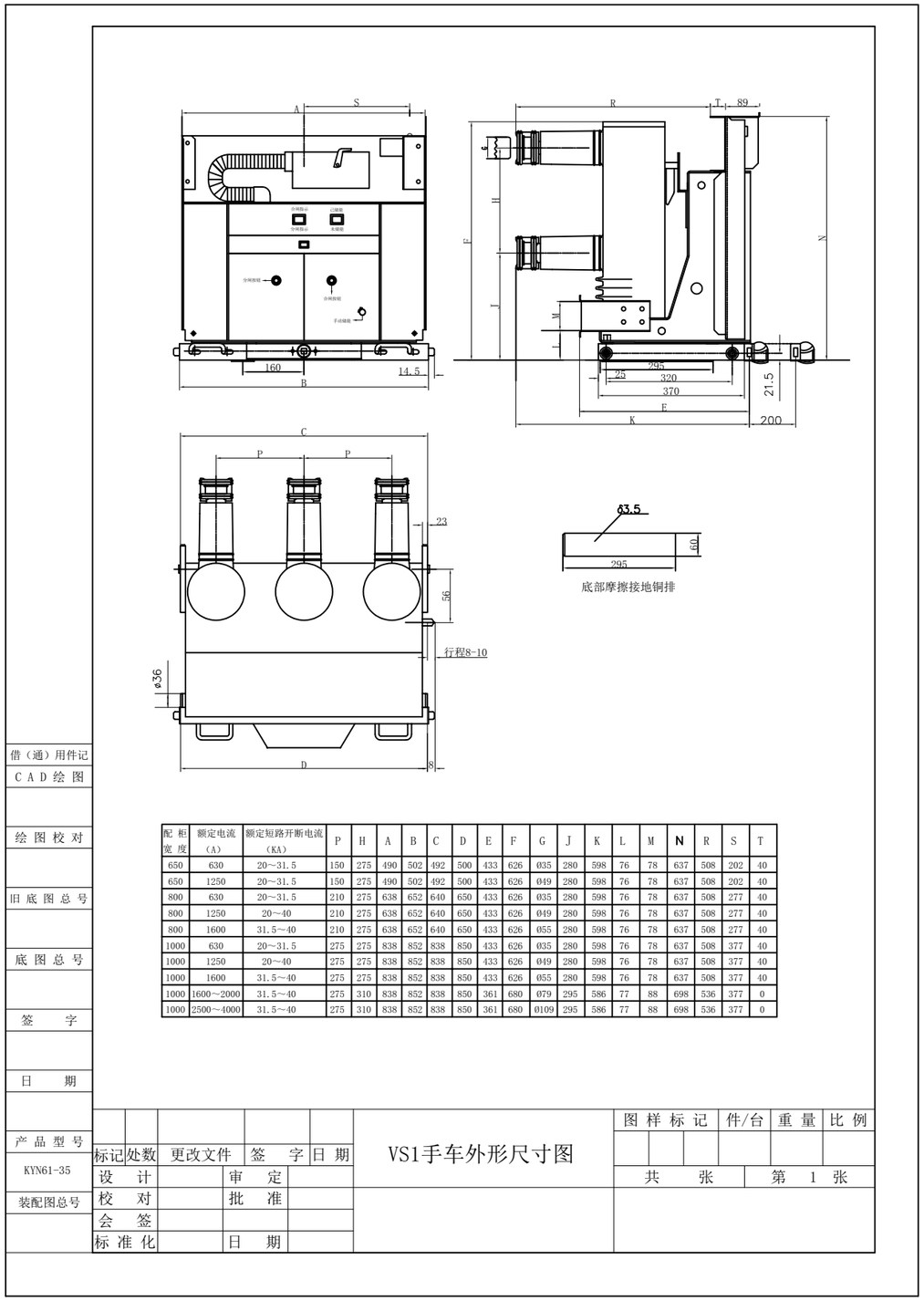

配柜宽度	额定电流（A）	额定短路开断电流（KA）	P	H	A	B	C	D	E	F	G	J	K	L	M	N	R	S	T
650	630	20～31.5	150	275	490	502	492	500	433	626	Ø35	280	598	76	78	637	508	202	40
650	1250	20～31.5	150	275	490	502	492	500	433	626	Ø49	280	598	76	78	637	508	202	40
800	630	20～31.5	210	275	638	652	640	650	433	626	Ø35	280	598	76	78	637	508	277	40
800	1250	20～40	210	275	638	652	640	650	433	626	Ø49	280	598	76	78	637	508	277	40
800	1600	31.5～40	210	275	638	652	640	650	433	626	Ø55	280	598	76	78	637	508	277	40
1000	630	20～31.5	275	275	838	852	838	850	433	626	Ø35	280	598	76	78	637	508	377	40
1000	1250	20～40	275	275	838	852	838	850	433	626	Ø49	280	598	76	78	637	508	377	40
1000	1600	31.5～40	275	275	838	852	838	850	433	626	Ø55	280	598	76	78	637	508	377	40
1000	1600～2000	31.5～40	275	310	838	852	838	850	361	680	Ø79	295	586	77	88	698	536	377	0
1000	2500～4000	31.5～40	275	310	838	852	838	850	361	680	Ø109	295	586	77	88	698	536	377	0

借（通）用件记								图样标记	件/台	重量	比例
C A D 绘 图											
绘 图 校 对											
旧 底 图 总 号											
底 图 总 号											
签 字											
日 期											
产 品 型 号	标记	处数	更改文件	签 字	日 期	VS1手车外形尺寸图					
KYN61-35	设 计			审 定							
装配图总号	校 对			批 准							
	会 签										
	标 准 化			日 期							

VS1-12

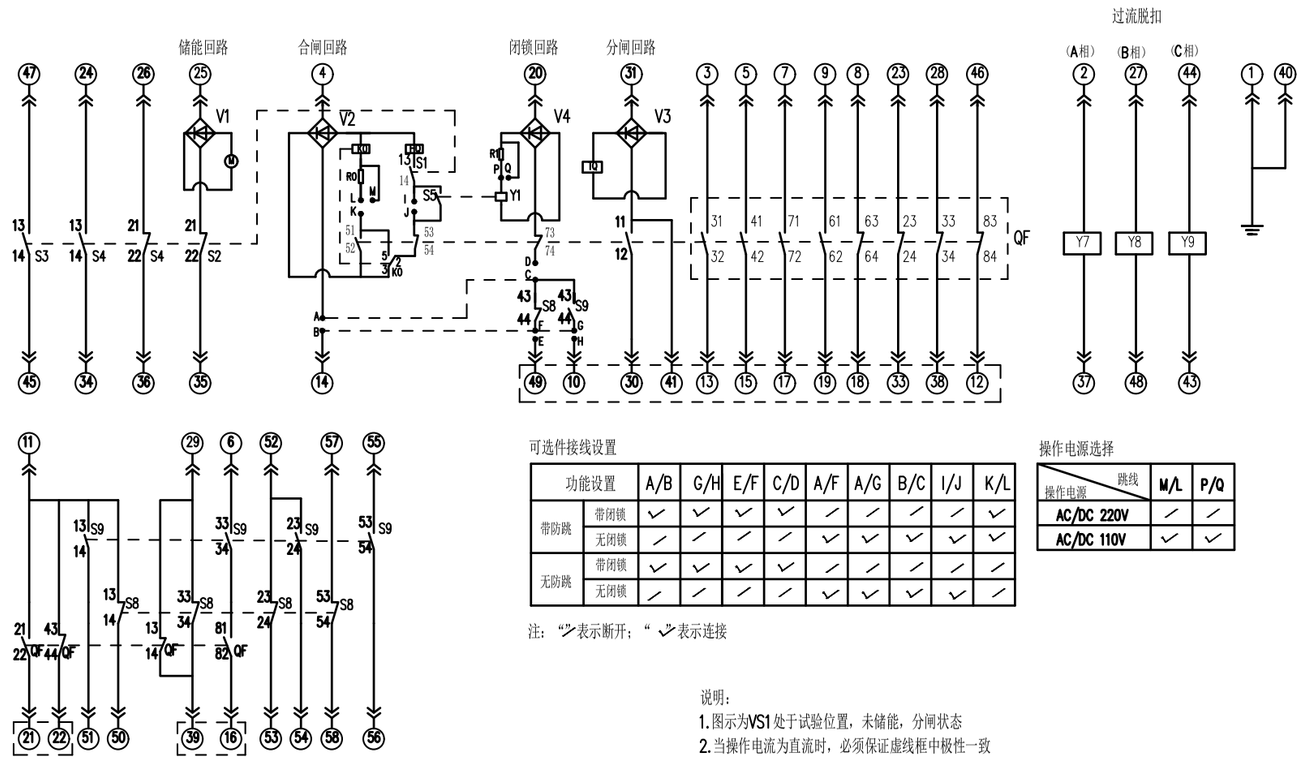

可选件接线设置

功能设置		A/B	G/H	E/F	C/D	A/F	A/G	B/C	I/J	K/L
带防跳	带闭锁	✓	✓	✓	✓	／	／	／	／	✓
	无闭锁	／	／	／	／	✓	✓	✓	✓	✓
无防跳	带闭锁	✓	✓	✓	✓	／	／	／	／	／
	无闭锁	／	／	／	／	✓	✓	✓	✓	／

注：“✓”表示断开；“／”表示连接

操作电源选择

操作电源 \ 跳线	M/L	P/Q
AC/DC 220V	／	／
AC/DC 110V	✓	✓

说明：
1. 图示为VS1处于试验位置，未储能，分闸状态
2. 当操作电流为直流时，必须保证虚线框中极性一致

S5：闭锁电磁铁微动开关	HQ：合闸线圈	K0：防跳继电器（可选）
S1-S4：微动开关（储能后切换）	TQ：分闸线圈	Y1：闭锁线圈（可选）
QF：辅助开关（分合操作时切换）	M：储能电机	V1-V4桥式整流器（可选）
a/b;i/j;k/l;m/l;p/q：跳线	R0-R1：电阻	Y7-Y9：过电流脱扣线圈（可选）
S8：试验位置辅助开关	S9：工作位置辅助开关	

标记	处数	分区	更改文件号	签名	日期
设计			标准化		
校对					
审核					
工艺			批准		

VS1-12手车二次原理图
(8K8B)

用户	
合同编号	
图样标记	数量 比例

通(借)用件登记
CAXA制图
电脑文件名
旧底图总号
底图总号
签字
日期

VS1-12

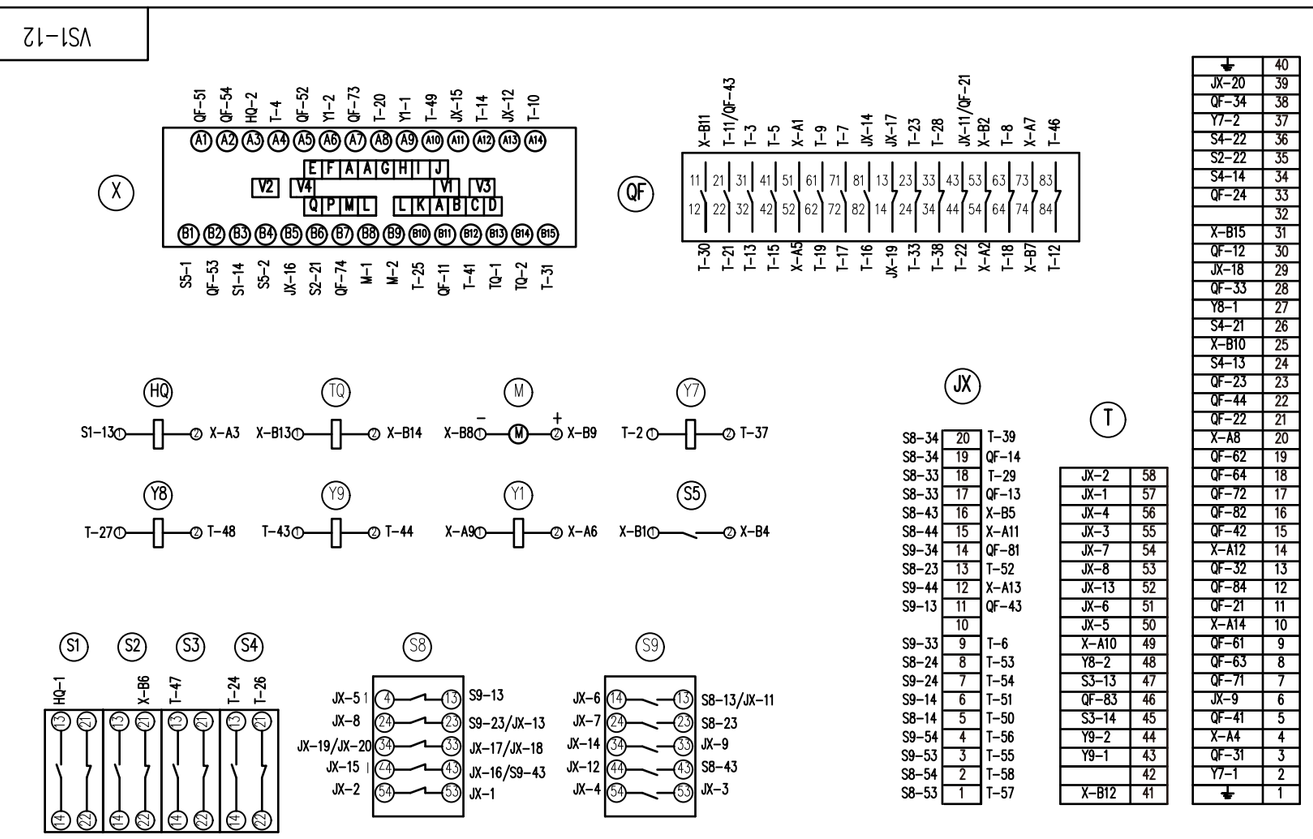

标记	处数	分区	更改文件号	签名	日期
设计			标准化		
校对					
审核					
工艺			批准		

VS1-12手车二次接线图
(8K8B)

用户	
合同编号	
图样标记	数量 比例

通(借)用件登记
CAXA制图
电脑文件名
旧底图总号
底图总号
签字
日期

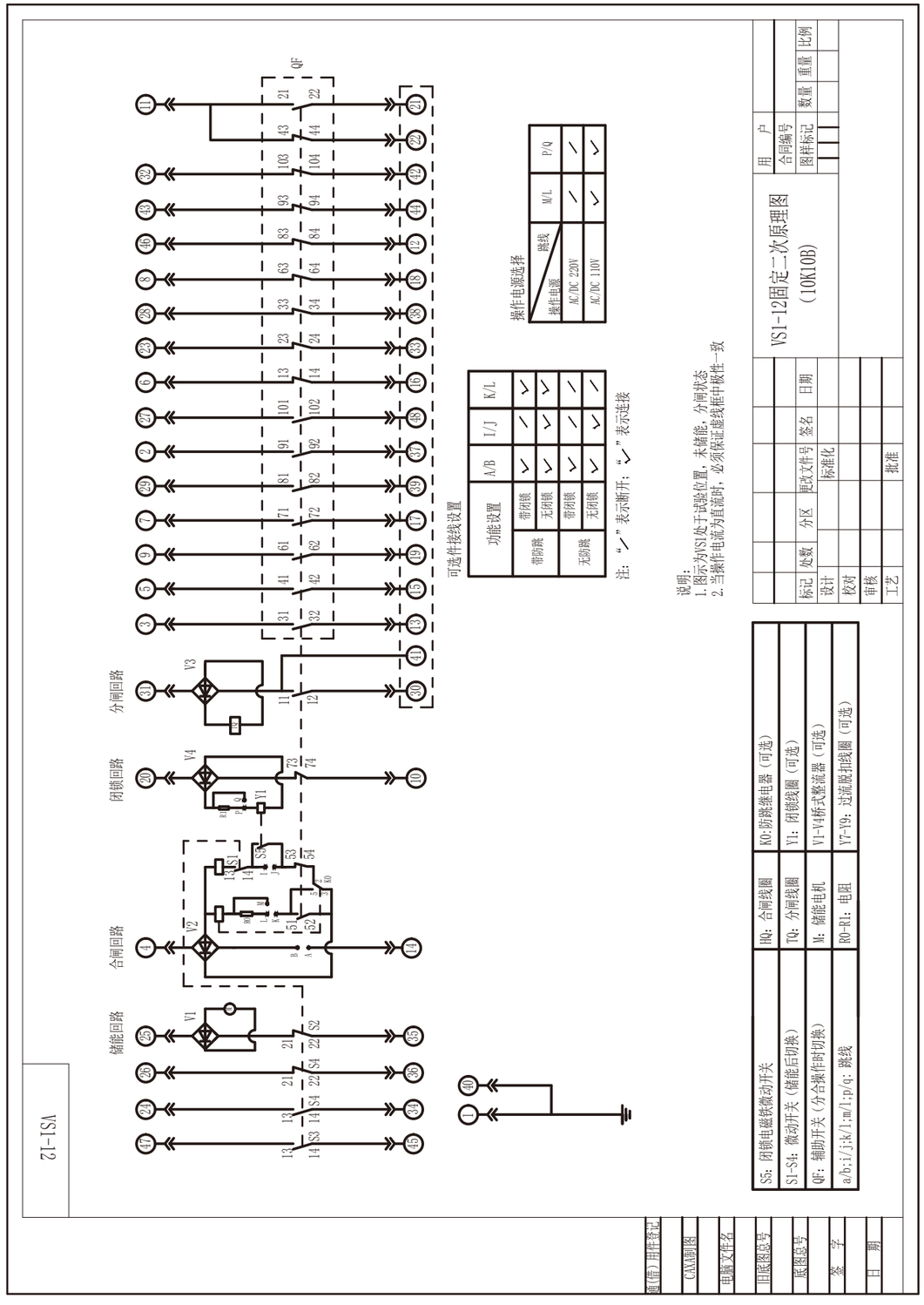
VS1-12
VS1-12固定二次原理图
（10K10B）
说明：
1. 图示为VS1处于试验位置，未储能，分闸状态
2. 当操作电流为直流时，必须保证虚线框中极性一致
注：“√”表示断开；“√”表示连接
可选件接线设置
功能设置
A/B
I/J
K/L
带跳跃
带闭锁
无闭锁
操作电源选择
跳线
操作电源
M/L
P/Q
AC/DC 220V
AC/DC 110V
储能回路
合闸回路
闭锁回路
分闸回路
QF
V1
V2
V3
V4
S1
S2
S3
S4
S5
M
K0
T0
R0
Z
HQ：合闸线圈
TQ：分闸线圈
M：储能电机
R0-R1：电阻
K0:防跳继电器（可选）
Y1：闭锁线圈（可选）
V1-V4:桥式整流器（可选）
V7-Y9：过流脱扣线圈（可选）
S5：闭锁电磁铁微动开关
S1-S4：微动开关（储能后切换）
QF：辅助开关（分合操作时切换）
a/b;i/j;k/l;m/l;p/q：跳线
标记 处数 分区 更改文件号 签名 日期
设计 标准化
校对
审核
工艺 批准
用户
合同编号
图样标记 数量 重量 比例
CAXA制图
电脑文件名
旧底图总号
底图总号
签字
日期
更改（借）用件登记

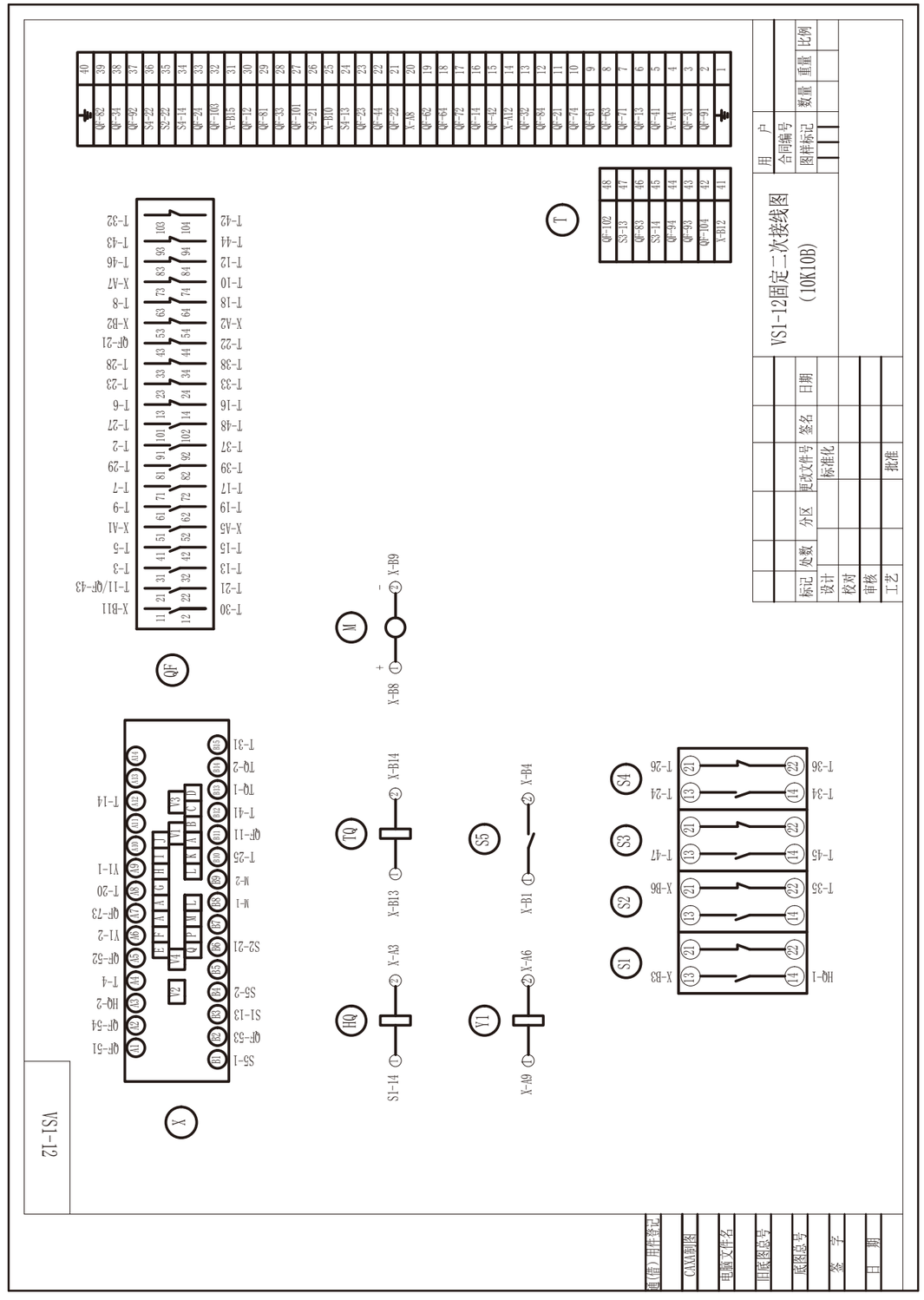
VS1-12
VS1-12固定二次接线图
（10K10B）
T
X
QF
M
T0
H0
V1
S1
S2
S3
S4
S5
HQ-1
QF-21
QF-11
QF-52
QF-51
QF-53
QF-54
HQ-2
2A
标记 处数 分区 更改文件号 签名 日期
设计 标准化
校对
审核
工艺 批准
用户
合同编号
图样标记 数量 重量 比例
CAXA制图
电脑文件名
旧底图总号
底图总号
签字
日期
更改（借）用件登记

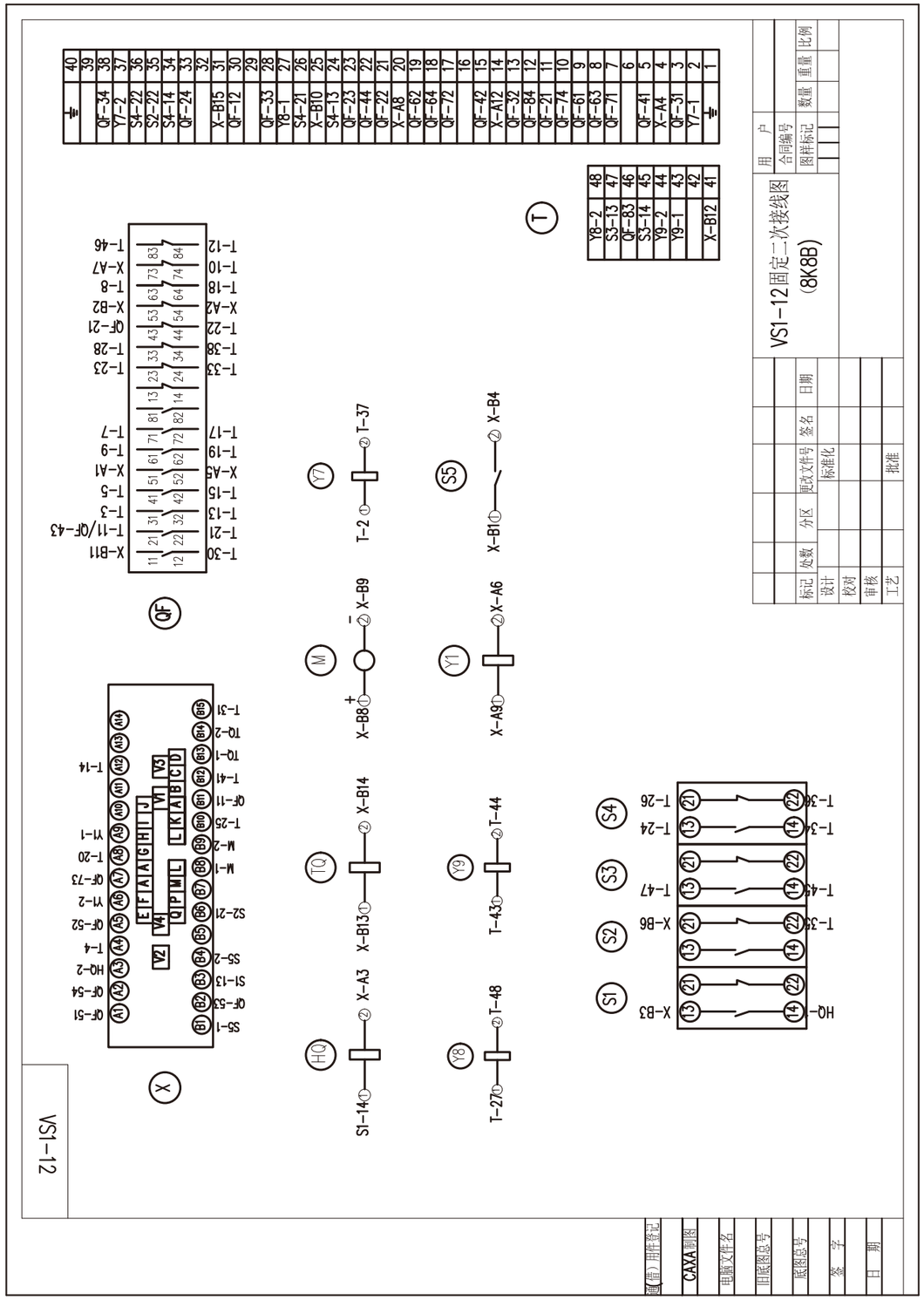
VS1-12固定二次接线图
(8K8B)
VS1-12
QF
X
T
M
HQ
TQ
Y7
Y8
Y9
Y1
S1
S2
S3
S4
S5
T-2
T-37
X-B9
X-A6
X-B1
X-B4
X-B8
X-B14
X-B13
X-A3
T-27
T-48
T-43
T-44
X-A9
S1-14
X-B3
X-B6
T-26
T-24
T-47
T-45
T-36
T-34
T-33
T-35
HQ-
X-B11
T-30
T-12
T-46
T-31
T-14
T-1
T-20
T-73
T-2
T-52
T-4
T-54
T-53
T-13
T-2
T-5
T-3
T-7
T-9
T-19
T-17
T-15
T-21
T-23
T-28
T-38
T-22
T-8
T-18
T-10
T-6
T-47
T-25
T-41
T-11
T-75
T-61
T-63
T-71
T-42
T-32
T-84
T-21
T-74
T-41
T-44
T-22
T-8
T-62
T-64
T-72
T-16
T-12
T-33

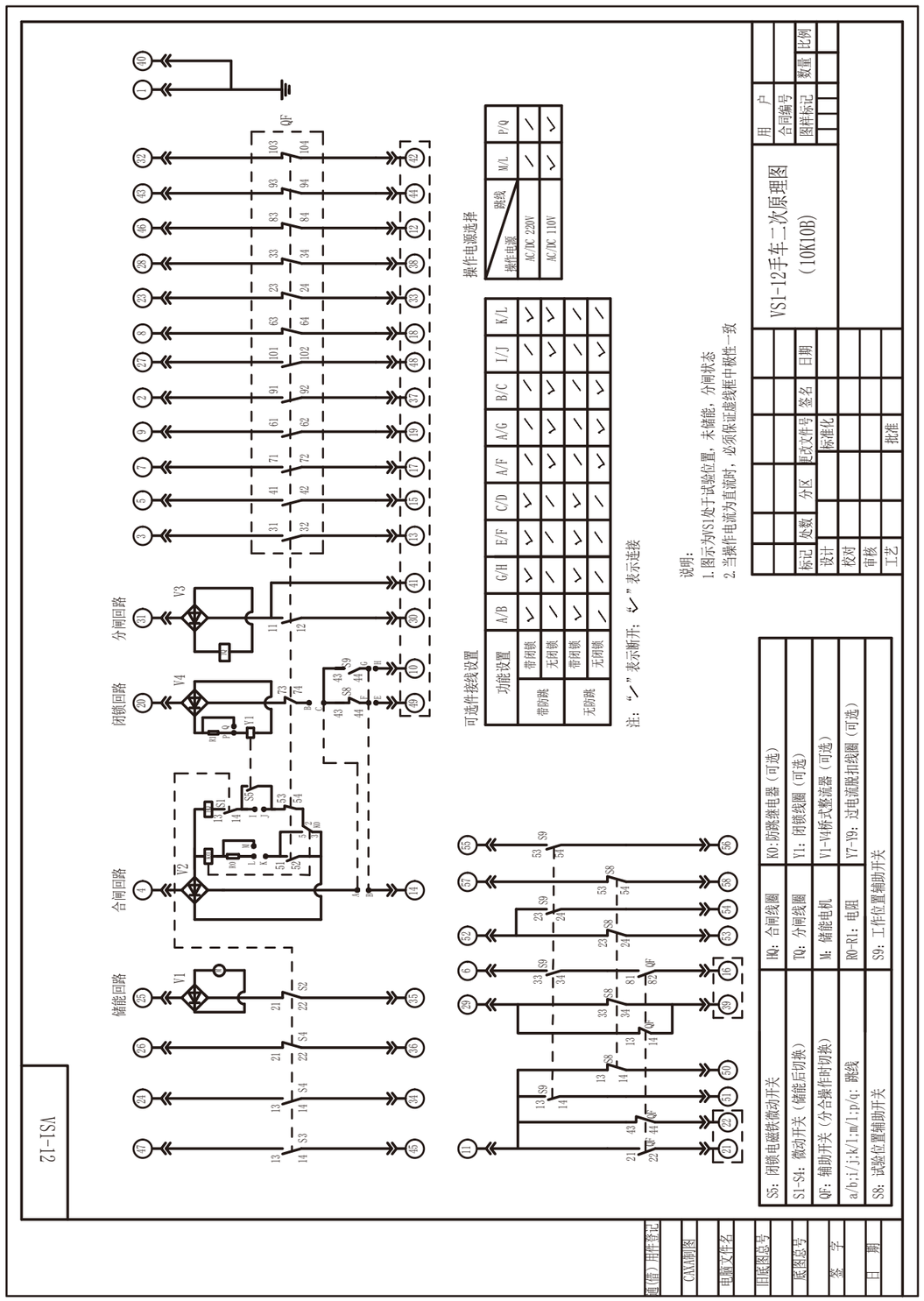
VS1-12
分闸回路
闭锁回路
合闸回路
储能回路
操作电源选择
可选件接线设置
说明:
1. 图示为VS1处于试验位置，未储能，分闸状态
2. 当操作电流为直流时，必须保证虚线框中极性一致
VS1-12手车二次原理图
(10K10B)
S5: 闭锁电磁铁微动开关
S1-S4: 微动开关（储能后切换）
QF: 辅助开关（分合操作时切换）
a/b;i/j;k/l;m/l;p/q: 跳线
S8: 试验位置辅助开关
HQ: 合闸线圈
TQ: 分闸线圈
M: 储能电机
RO-R1: 电阻
S9: 工作位置辅助开关
KO: 防跳继电器（可选）
Y1: 闭锁线圈（可选）
V1-V4桥式整流器（可选）
Y7-Y9: 过电流脱扣线圈（可选）

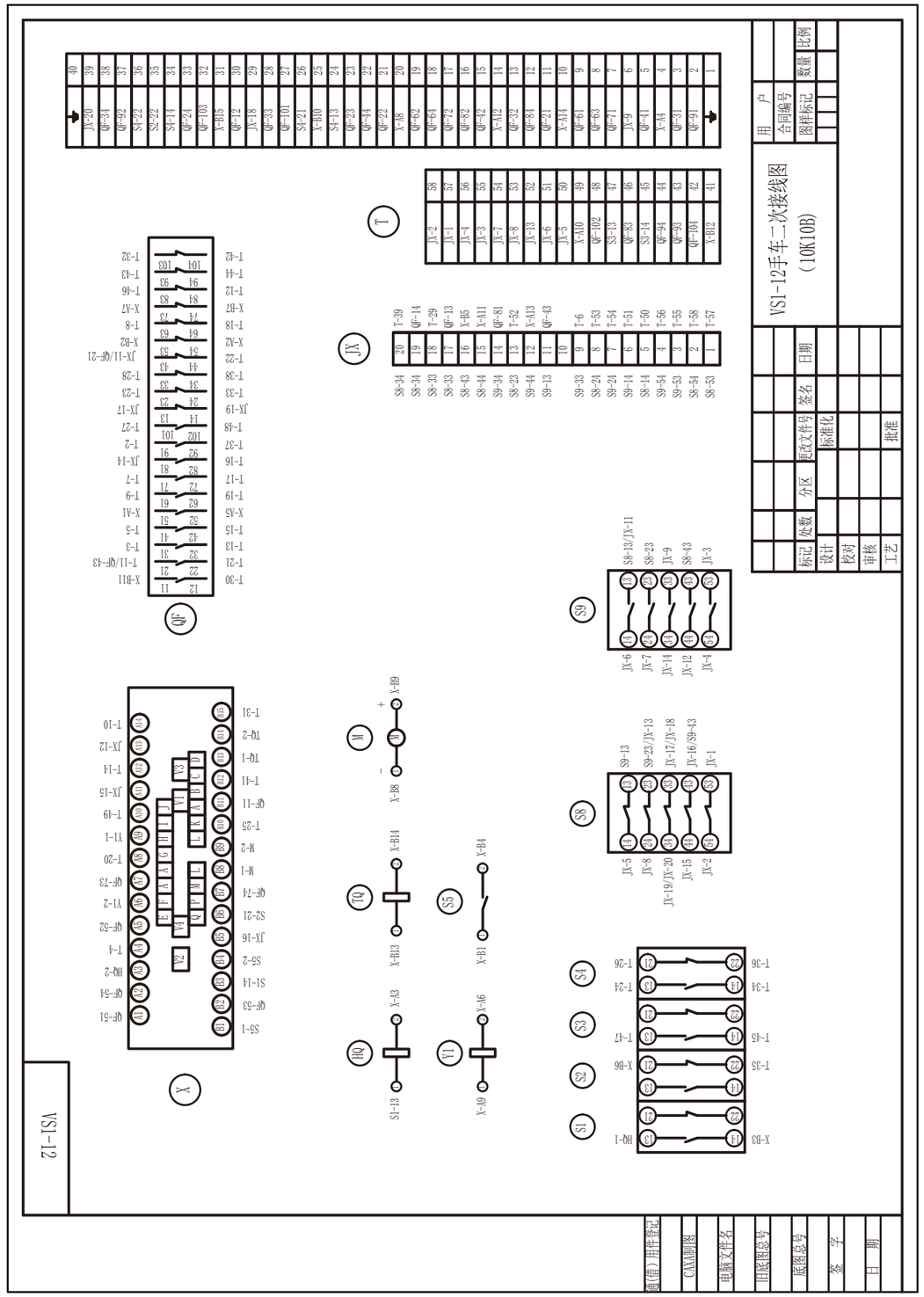
VS1-12
VS1-12手车二次接线图
(10K10B)

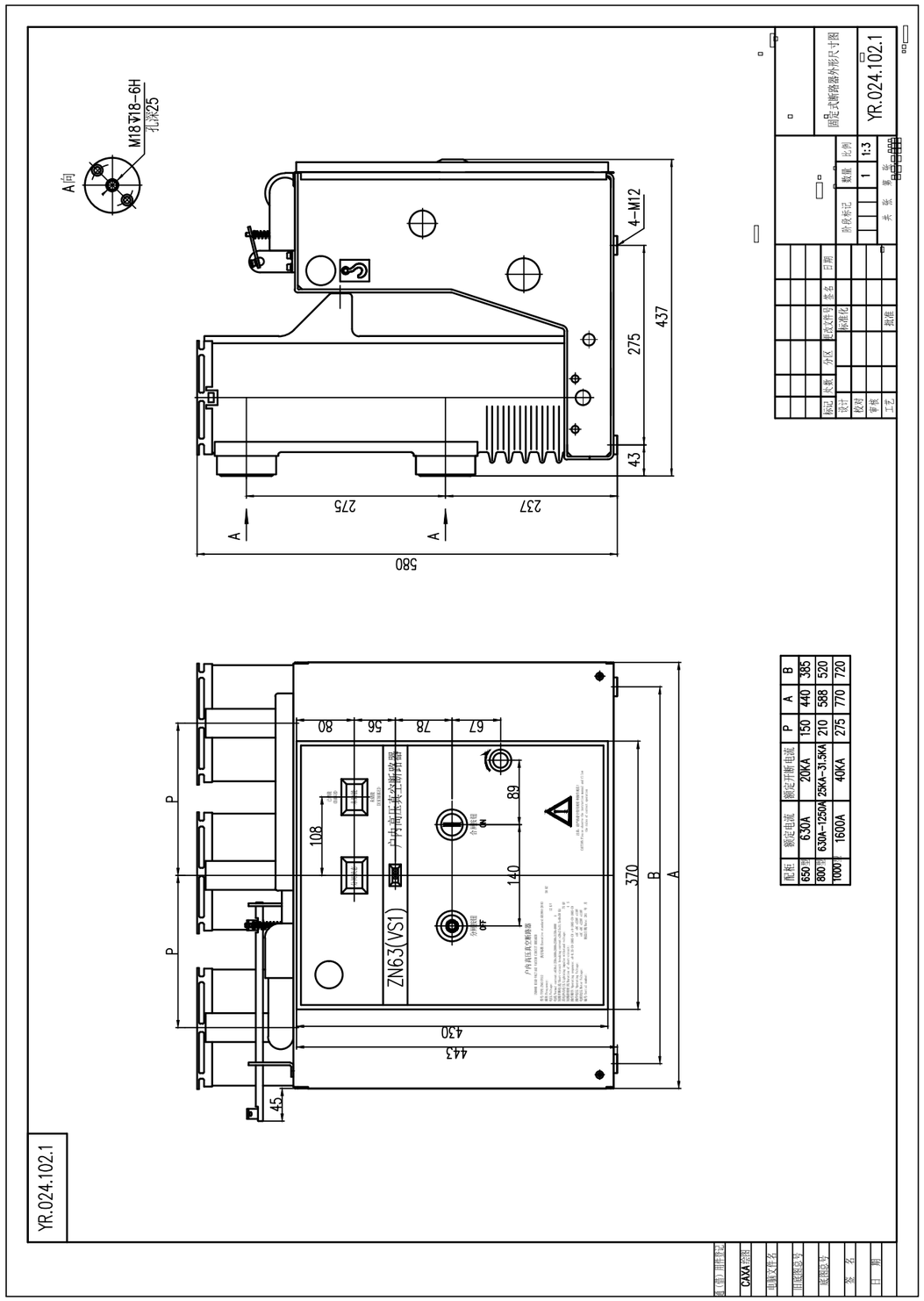

Recommended size of circuit breaker and cabinet

VS1-12 (650) and cabinet (650) recommended size diagram:
VS1-12(800) and cabinet (800) recommended size diagram:

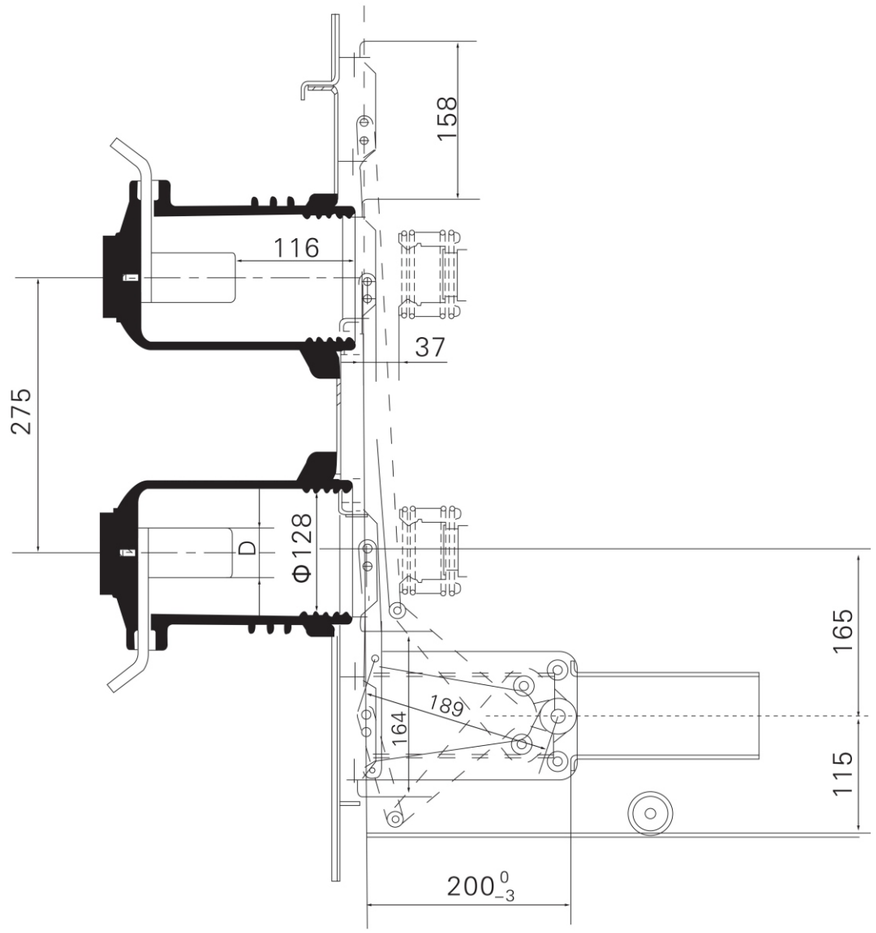

Rated current (A)	630	1250	1600
Rated short circuit breaking current (KA)	20、25、31.5	20、25、31.5、40	31.5
Fit static contact size (mm)	ϕ35	ϕ49	ϕ55

VS1-12(1000) and cabinet (1000) recommended size diagram:

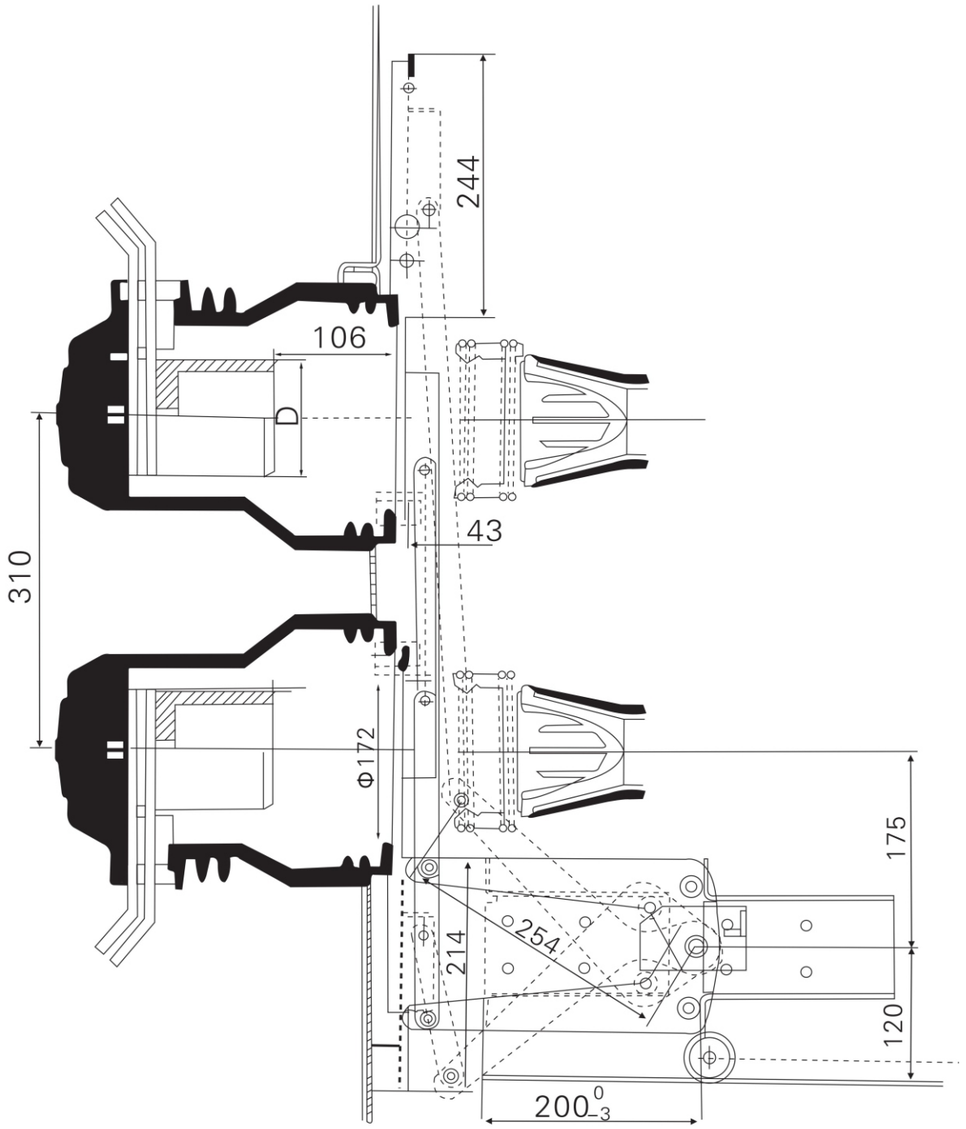

Rated current (A)	1600	2000	2500	3150	4000*
Rated short circuit breaking current (KA)	31.5、40	31.5、40	31.5、40	31.5、40	40
Fit static contact size (mm)	Φ79		Φ109		

Matching size diagram of dynamic and static contacts:

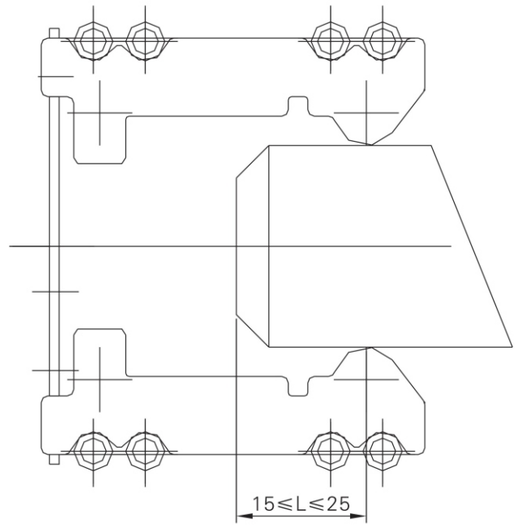

Grounding device assembly dimensions

VS1-12 (650) and VS1-12 (800) grounding assembly dimensions

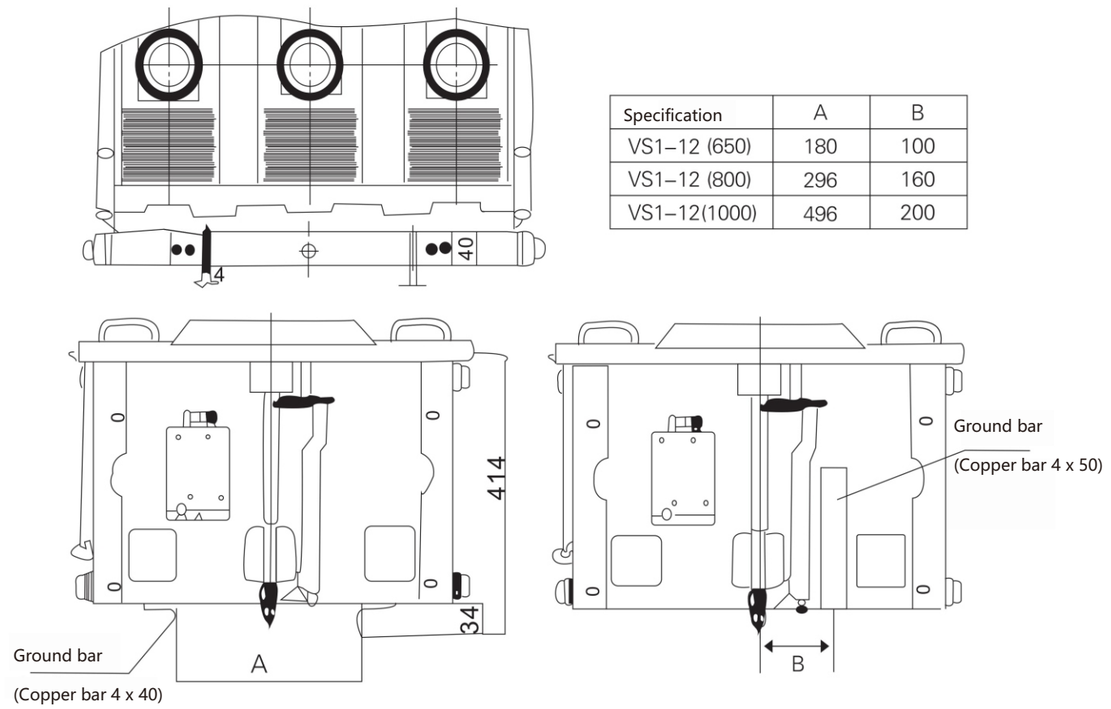

Specification	A	B
VS1–12 (650)	180	100
VS1–12 (800)	296	160
VS1–12(1000)	496	200

VS1-12 (1000) grounding device assembly size drawing:

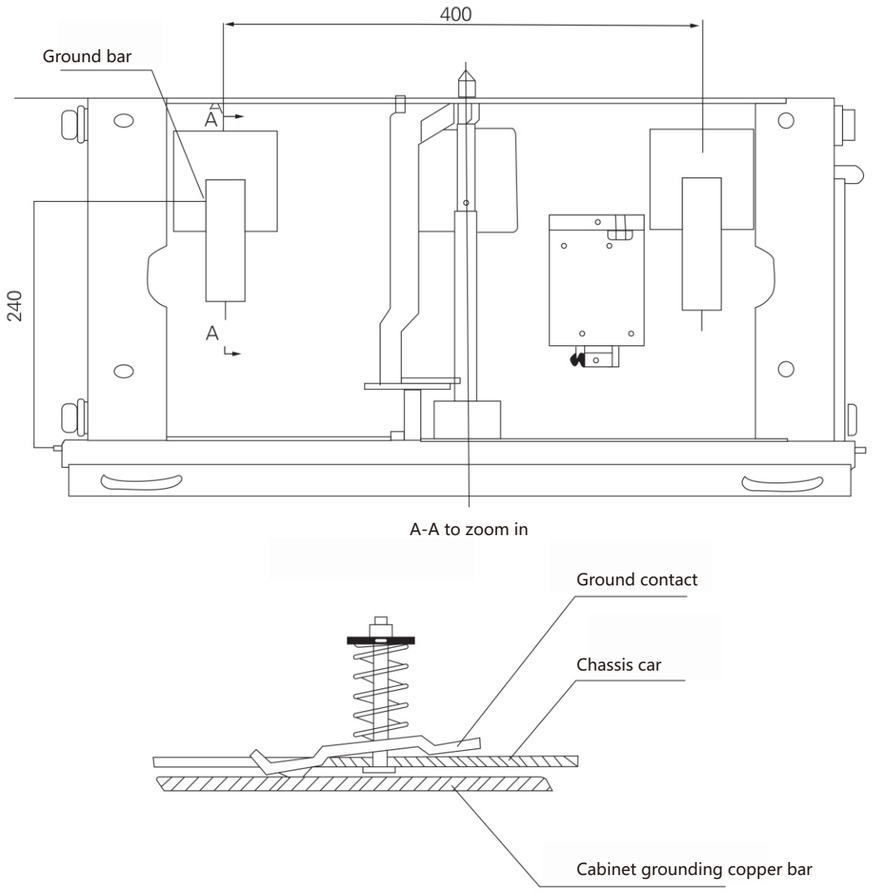

○ configuration

Secondary control voltage

DC220V,AC220V,DC110V, AC110V

Secondary control optional configuration:

- Locking device:
  Function: When the secondary control power supply is not connected or lower than the technical conditions to prevent closing.
- Overcurrent device:
  Function: In the case of a circuit overload or short circuit, through the overcurrent relay to make the action of the overcurrent coil, so that the circuit breaker. Generally added in A, C phase, there are also three phases added, overcurrent release has 3.5A and 5A two kinds.
- Undervoltage and undervoltage trip device:
  The undervoltage release automatically opens the circuit breaker when the PT voltage is less than 35% Un.

- Reliable closing of circuit breaker when PT voltage>85% Un; The voltage loss release cannot close when the PT voltage is<35% Un, and the circuit breaker should not open when the PT voltage is>65% Un.
  Note: If undervoltage and undervoltage release devices are selected, the overcurrent device can only use two overcurrent devices.

Grounding device:

- Based on the cabinet widths, the circuit breaker can be classified into 650 wide grounding schemes, 800 wide grounding schemes, and 1000 wide grounding schemes. (See Figure 6.10)

Electrical parameter table of secondary components

- Operating voltage 220V

Minimum/maximum	Closing electromagnet	Switching electromagnet	Locking electromagnet
Loop current	1.42/1.67A	1.1 A/ 1.67A	21mA/25mA
Power (W)	313/368	240/368	4.7/5.5

- Operating voltage 110V

Minimum/maximum	Closing electromagnet	Switching electromagnet	Locking electromagnet
Loop current	2.84/3.34A	2.16 A/ 3.34A	21mA/25mA
Power (W)	312/368	239/368	2.3/2.8

- Note: anti-jump device

After closing the circuit breaker, if the closing signal is not removed in time, the internal anti-jump control loop of the circuit breaker will cut off the closing loop to prevent multiple reclosing. If a comprehensive protection device is used on the cabinet with anti-jump function, it is necessary to confirm whether the anti-jump device needs to be installed.

In order to prevent accidents, grease and other work of the operating mechanism should be carried out in the state of no energy storage. The fault maintenance of the circuit breaker should be carried out by trained personnel or service personnel of the manufacturer to make correct adjustments.

○ configuration

NO.1

When the circuit breaker is lifted from the packing box, the hook should be hung on the clearly marked lifting hole on the circuit breaker. The upper and lower outlet arms should not be stressed when moving. The circuit breaker should not be subjected to large shock vibration.

"Note: Please remove the lifting device as required before formal loading operation.

NO.2

The circuit breaker has been strictly inspected before delivery, and the parameters meet the technical requirements. The following preparations must be made before the primary circuit is energized.

- Check if the circuit breaker is damaged. If there is any damage, please stop using it.
- Removing dirt, especially on insulation surfaces, can affect the insulation performance of products due to dirt caused during transportation or storage.
- Manually operate the circuit breaker according to regulations for energy storage, closing, and opening, and observe whether the energy storage status and opening position indication are normal.
- Use the operating power supply to operate the circuit breaker for energy storage, opening and closing, and observe whether the energy storage status and opening and closing positions are normal.
- Insert the push handle into the push hole, shake clockwise to push in, and counterclockwise to push out. The total advance stroke is 200mm. In the opening state, it should smoothly enter the working or testing position. Please rotate the handle at a medium speed for about 20 turns. When you hear a "click" sound, it is in place (avoid damaging the propulsion mechanism due to excessive force), and the corresponding position indication (S8, S9) circuit is connected.